Adviesbureau ir. J.G. Hageman B.V.

Dossier 9032
QUAKESHIELD

Report 9032-2-0
Modelling of the in plane behaviour

21st of November 2017

Polakweg 14e
Postbus 26
2280 AA Rijswijk ZH

Telefoon 070 - 399 03 03
mail@adviesbureau-hageman.nl
www.adviesbureau-hageman.nl

CONTENT

1 Introduction 2

1.1 Order 2
1.2 Available data 2
1.3 Summary of available data 2
1.3.1 The system 2
1.3.2 Material properties 3
1.3.3 Specimens 4
1.3.4 Loading and measurements 6
1.3.5 Summary of results 6

2 Analyses of results 8

2.1 General 8
2.2 Behaviour of an unreinforced masonry wall due to in plane loading according to EC 6 . 9
2.2.1 General 9
2.2.2 Moment failure 10
2.2.3 Shear failure 11
2.3 Behaviour of a reinforced masonry wall due to in plane loading according to EC 6 12
2.3.1 General 12
2.3.2 Moment failure 13
2.3.3 Shear failure 14
2.4 Specimens failing due to rocking/crushing 14
2.5 Analysis of specimens failing due to shear 16
2.6 Analysis of specimens failing due to sliding as base joint 17
2.7 Conclusions and recommendation 17

3 Summary 19

1 Introduction

1.1 Order

By QuakeShield B.V., a cooperation of Oosterhof Holman and SealteQ, a system is developed to enhance the structural properties of masonry walls. This system, named QuakeShield, improves the resistance of walls against seismic effects. To substantiate the use of the system, QuakeShield, in cooperation with the TU/e, performed experimental research that makes it possible to describe the structural behaviour of walls in which the system has been applied.

In report 9032-1 a model is described that can be used to determine the structural behaviour of a masonry wall of which the properties are enhanced by applying QuakeShield in case it is loaded perpendicular to its plane.

In this report experimental results of in plane tests are summarized and verified against results based on the rules in Eurocode 6 (NEN-EN 1996-1-1). Based on this verification rules to describe the in plane behaviour of masonry walls strengthened with QuakeShield are described.

1.2 Available data

The following data has been received from QuakeShield

1. Report: Static-Cyclic Shear Tests on QuakeShield-reinforced Masonry Walls, August 2017.

1.3 Summary of available data

1.3.1 The system

QuakeShield consists of several components. It starts with the application of carbon fibre reinforced polymer strips (CCFRP) in sleeves, placed in the middle of the masonry walls. The strips have a cross sectional dimension of 1,4×20 mm². The tension capacity of the strip is 78,4 kN. The Young's modulus equals 205 GPa. The connection between masonry and the CCFRP-strips is provided by a visco-elastic adhesive QuakeShield Epoxy (Q-poxy).

Additional to this, a wall finishing can be applied on the side where the sleeves have been made. For this two types of finishing are available:

- a cement based matrix with an embedded CCFRP-net
  the thickness of the cement matrix is 15 to 20 mm
  the net is consisting of wires 3×0,044 mm² at a centre-to-centre distance of 20 mm in both directions
- a polymer based finishing
  the thickness of the layer is ± 5 mm

Material properties of these finishing's are summarized hereafter:

table 1 Properties of wall finishing

Property	unit	Cement layer with CCFRP-net		Polymer
		Cement layer	CCFRP-net	
density	kg/m³	2090	1790	1087
Young's modulus	GPa	26	160	1,2
tensile strength	MPa	6,5	4300	45
compressive strength	MPa	45,5	-	38
max elongation	%	-	1,75	600

In figure 1 the application of the system is shown. During the application first sleeves are created in the masonry wall. This can be done from the inside or the outside of the wall. The centre-to-centre distances between the sleeves can be varied. After this the CCFRP-strips will be applied in a bed of Q-poxy. After this a finishing can be applied. In the figure the finishing consists of a CCFRP-net over which a cement matrix layer is applied.

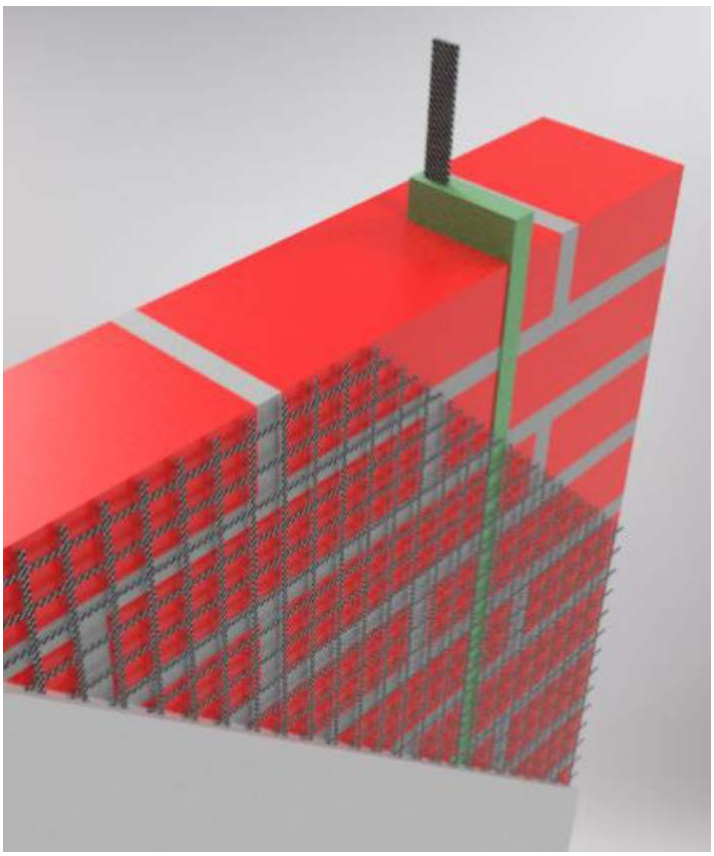

figure 1 Application of the QuakeShield system with a wall finishing of a cement based matrix with an embedded CCFRP-net

The specimens that have been tested all had a finishing with a cement-based matrix.

1.3.2 Material properties

From the test results the following material properties are derived.

The compressive strength of the masonry is approximately equal to 15 N/mm²

The shear strength of the masonry derived from a triplet test results equals:

$f_v = f_{vo} + 0{,}92\ \sigma_n$

where:
f_{vo} is the initial shear strength equal to 0,22 N/mm²
σ_n is the average normal stress in the shear plane considered.

It should be noted that the friction coefficient that has been derived from the material test (0,92) is relative high. In general a value equal to 0,7 to 0,8 will be found. The value of the friction coefficient is influenced by one relative low value for the shear strength with a small normal stress. If this test result is skipped the shear strength can be described as follows:

$f_v = f_{vo} + 0{,}82\ \sigma_n$

where:
f_{vo} is the initial shear strength equal to 0,30 N/mm²
σ_n is the average normal stress in the shear plane considered.

Here after it is assumed that the own weight of the masonry is equal to 18 kN/m³.

1.3.3 Specimens

In the tests 3 different specimens are considered, with a small, a medium and a large width of respectively 1,1 m, 2,0m and 4,0 m. The specimens are indicated with the letters S, M and L. The dimensions of the specimens, as well as the placing of the CFRP strips and the anchors are shown in figure 2. The thickness of the masonry wall equals 100 mm.

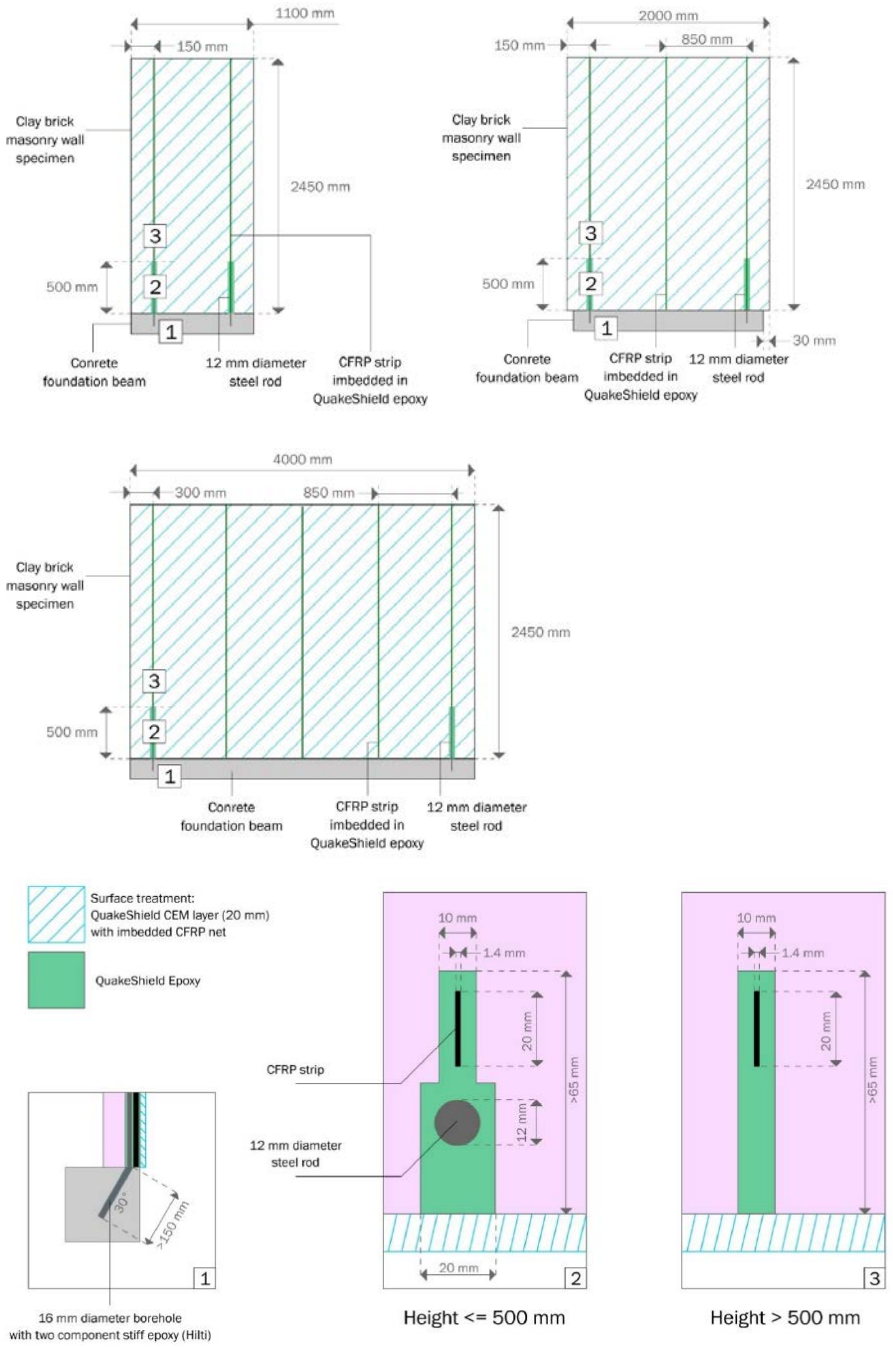

figure 2 Dimensions of the specimens S, M and L

For each width three different levels of normal load are applied to the specimens.

table 2 Normal load to the specimens

specimen	S		M		L	
	σ_v [N/mm²]	F_v [kN]	σ_v [N/mm²]	F_v [kN]	σ_v [N/mm²]	F_v [kN]
1	0,2	22	0,15	30	0,15	60
2	0,3	33	0,3	60	0,3	120
3	0,5	55	0,5	100	0,5	200
own weight		4,9		8,8		17,6

1.3.4 Loading and measurements

The specimens are loaded in vertical direction by a top beam which does not limit the displacement or rotation of the wall. The horizontal load is applied by a horizontal actuator that can be active in both direction. The actuator is controlled by displacements which is increased after reaching the achieved displacement in both directions twice. The one last step is a displacement of 28,6 mm. The final displacement is 40 mm.

The displacements and deformations are measured on 9 locations:

- two horizontal (4) and (5);
- two for the vertical uplift of the masonry at the base, at the location of the anchors (10) and (11);
- two locations where the vertical deformation of the masonry wall is measured (8) and (9);
- two locations where the diagonal deformation of the masonry wall is measured (6) and (7);
- one horizontal at the top, used to control the test (12).

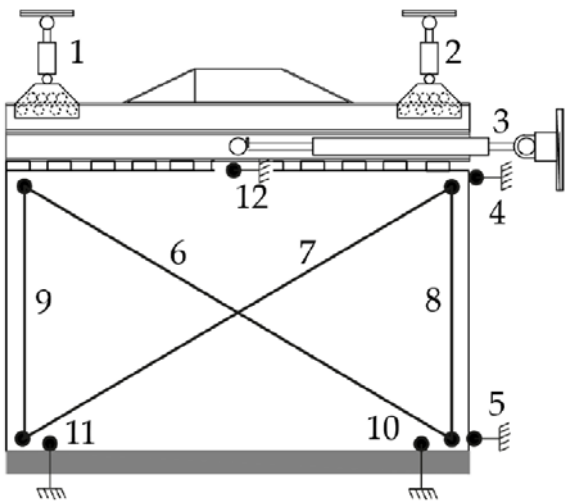

figure 3 Test setup

The uplift (10) and (11) is the displacement of the masonry, a few layers above the base joint, including the uplift of the concrete base beam if this occurs.

1.3.5 Summary of results

Hereafter a summary of the results, which are more extensively described in [1] , is given.

table 3 Summary of results

specimen	maximum horizontal force		mode	maximum displacement [mm]
	pull [kN]	push [kN]		
S1	13,2	11,9	rocking	28,6
S2	10,8	22,3	rocking	40,0
S3	20,5	21,6	rocking/crushing	40,0
M1	30,0	31,7	rocking/crushing	40,0
M2	41,0	40,2	rocking/crushing	40,0
M3	52,6	61,4	rocking/crushing	40,0
L1	88,5	94,3	rocking/sliding	40,0
L2	124,5	135,1	rocking/sliding	28,6
L3	170,7	173,0	rocking/sliding	28,6

The following should be noted. The test on specimen S1 was stopped due to the fact that the displacement limit of the actuator was reached. The test on the specimens S2, S3, M1, M2, M3 and L1 were stopped at a maximum displacement of 40 mm. However there was not a significant reduction of the horizontal resistance of the specimen.

Displacements and deformation of the wall are caused by cracking of the joint between the masonry wall and the concrete base beam. After which the vertical displacement over this joint increases. For the specimens S3, M1, M2 and M3 this results in crushing of the masonry at the toe of the wall. The specimens L1, L2 and L3 starts to slide over the joint at the base. This results in significant damage to the masonry that is surrounding the steel anchors.

From the measurements of the vertical and diagonal deformations of the wall panels, for all specimens it can be concluded that these deformations are neglectable. Also none of the wall panels show any cracking except for the base joint.

Hereafter the results of the displacement measurements on specimen M2 are shown as an example

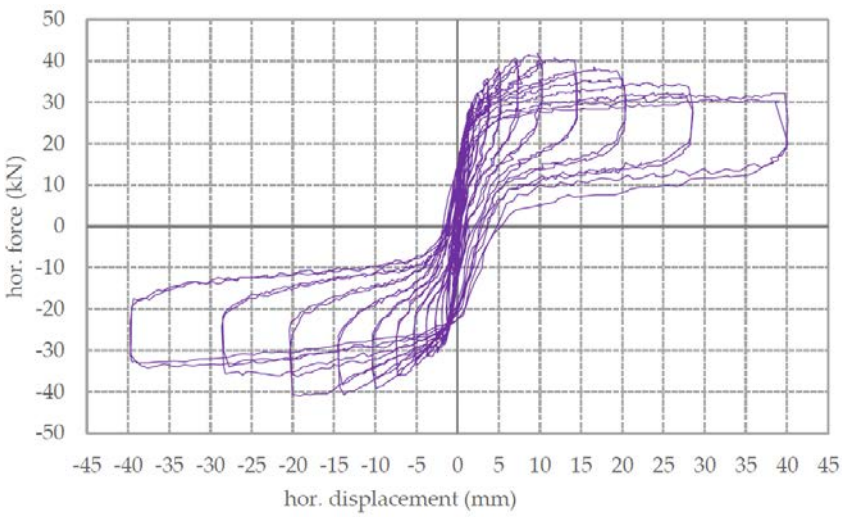

figure 4 Horizontal displacement (12) – horizontal force relation specimen M2

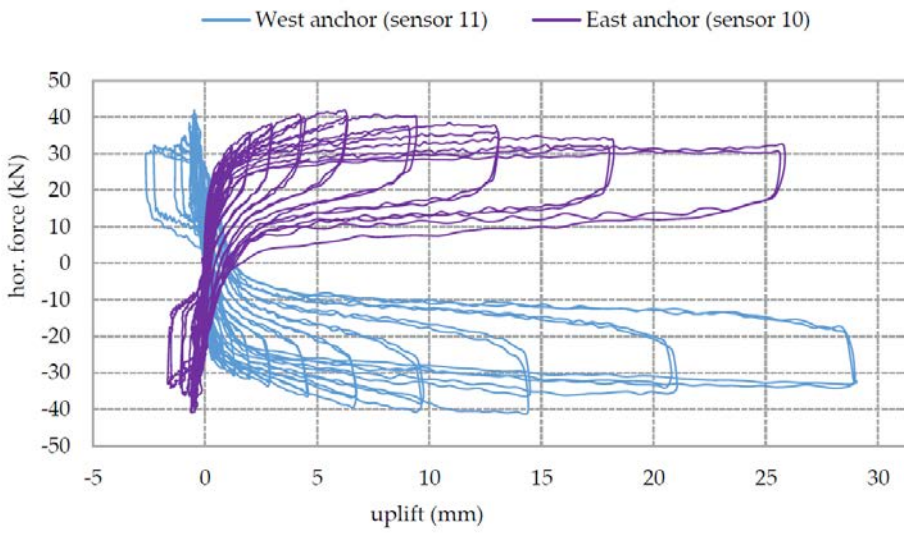

figure 5 Vertical displacement (11 and 10) – horizontal force relation specimen M2

2 Analyses of results

2.1 General

In this section the results of the in plane test will be analysed. Due to the vertical sleeves which were created in the masonry wall, their shear force resistance will be reduced. Due to the reduction of the vertical cross section at the location of the sleeves, the vertical shear stresses in the remaining part of the wall increase.

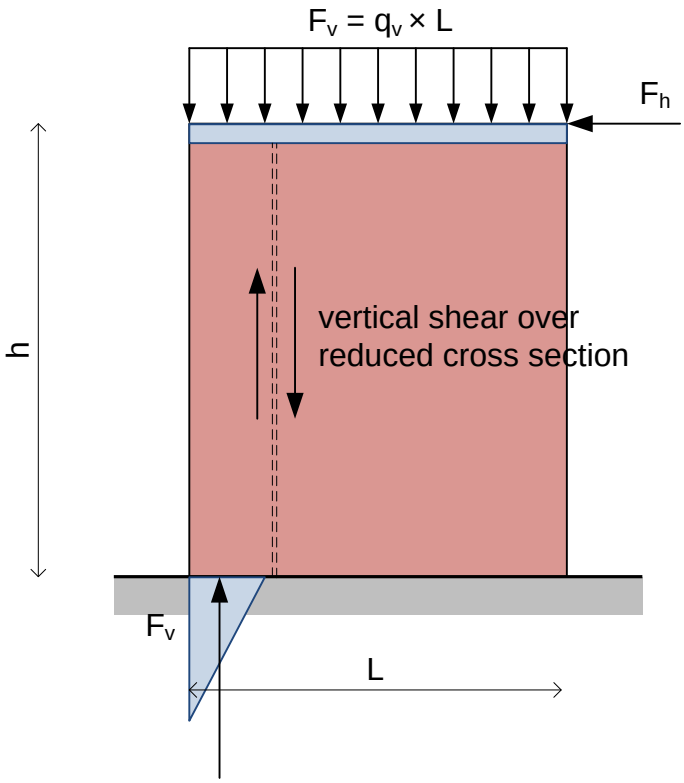

figure 6 Vertical shear over reduced cross section

One of the aims of the application of the CEM finishing of the wall is to improve the shear resistance. Whether the aim is achieved can be derived from the analysis.

The tension strength of masonry is limited and in general assumed to be 0 when the resistance of a structure is described. Therefore the maximum horizontal load on the wall is determined by the available vertical forces, such as the top load and the own weight of the wall, and its dimension. By applying the CFRP-strips in the masonry wall, a tensile resistance is introduced. In the test specimens the outermost CFRP strips are lapped with a steel anchor which is anchored in the concrete base beam. By applying this anchor, a tension resistance is introduced in the critical section at the base of the wall which will enhance the resistance against a horizontal force.

2.2 Behaviour of an unreinforced masonry wall due to in plane loading according to EC 6

2.2.1 General

In figure 7 a scheme of two masonry walls with in plane loading is shown. One of the walls is rather slender. The other wall is stocky. The ratio between the height of the wall (h) and the length (L) is also described as the aspect ratio (h/L)

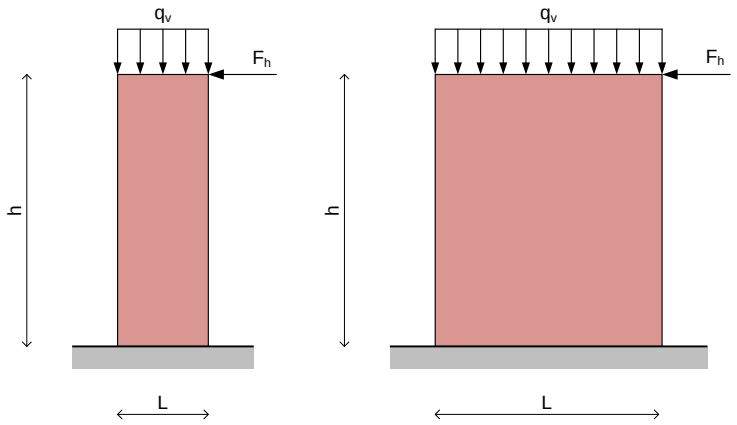

figure 7 Sketch of a slender and a stocky masonry wall with in plane loading

When out of plane buckling is not considered, then there are two failure modes that can occur:

- moment failure or rocking;
- shear failure.

The governing failure mode is determined by the aspect ratio (height divided by length) and the ratio between the vertical and horizontal loading.

Hereafter the rules in Eurocode 6 (NEN-EN 1996-1-1) for the moment and shear resistance of unreinforced walls are summarized.

2.2.2 Moment failure

The moment in a horizontal section is equal to the product of force F_h and the distance between this force and the section considered. In general the weakest section is the section at the base. Here no tensile strength is available. Often the bond between concrete and masonry is broken due to the restraint of imposed deformations caused by temperature effects and shrinkage. According to Eurocode 6 the moment resistance should be based on the assumption that no tensile strength is available.

The moment resistance M_R is based on equilibrium of wall, which is influenced by the ultimate eccentricity of the vertical reaction force.

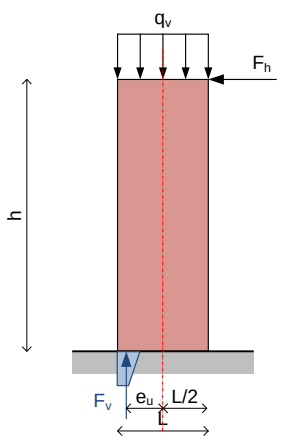

figure 8 Sketch of masonry wall with in plane loading reaching the moment resistance

The ultimate eccentricity e_u follows from the ultimate depth of the compression zone and the length of the wall:

$$F_v = q_v L$$

$$x_u = \frac{14 F_v}{9 t f_m}$$

$$e_u = \frac{L}{2} - \frac{67}{189}\frac{14 F_v}{9 t f_m}$$

$$M_R = F_v e_u = F_v \left[0,5L - 0,551 \frac{F_v}{t f_m} \right]$$

where:
t is the thickness of the wall;
f_m is the compressive strength of the masonry.

The ultimate horizontal load follows from:
$\Sigma M = 0$

$$F_{h,u} = \frac{M_R}{h} = \frac{F_v}{h}\left[0,5L - 0,551 \frac{F_v}{t\ f_m} \right]$$

When this ultimate horizontal load is reached to failure modes are possible:
- a rocking mode where the wall starts to turn over its tip;
- a crushing mode where the masonry at the toe of the wall starts to crush.

Whether the rocking mode or the crushing mode will be found depends on the ratio between the vertical load and the compressive strength of the masonry.

2.2.3 Shear failure

With respect to shear failure two situations have to be considered:
a. shear failure in the masonry wall, where the resistance is based on the initial shear strength, the contribution from the normal stress and the length of the compression zone;
b. sliding of the masonry wall over the base, where the resistance is based on dry friction only.

According to Eurocode 6 the shear resistance of the masonry wall V_R can be derived with the following equation:

$$V_R = x_v\, t \frac{f_{vo} + 0,4\sigma_v}{\gamma_m} = x_v t \frac{f_{vo}}{\gamma_m} + \frac{0,4 F_v}{\gamma_m}$$

where:
x_v is the length of the compressed part of the horizontal section, see figure 9

It should be noted that the length of x_v varies over the height of the wall.

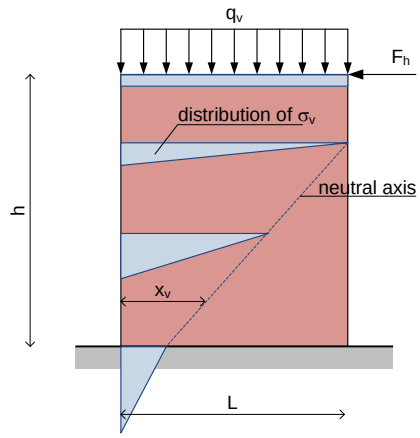

figure 9 Shear wall with varying length of the compressed part x_v

Based on table F.2 of NPR 9998[2017] a friction coefficient (tan φ) can be assumed. According to the table the friction coefficient for clay brick masonry is equal to 0,75. This coefficient can be used to describe the shear resistance of the base joint between the masonry wall and the concrete base beam. This joint has different properties than a regular bed joint in masonry. Also the initial shear strength of the joint will be different. First due to deformation behaviour caused by temperature effect and drying shrinkage the bond between concrete and masonry can be broken. Secondly due to the cyclic load the bond will be completely gone when the masonry is on the tension side of the specimen.

The resistance against shear/sliding in the base joint is then equal to:

$V_{R,s} = 0{,}75\ F_v$

2.3 Behaviour of a reinforced masonry wall due to in plane loading according to EC 6

2.3.1 General

The behaviour and resistance of a reinforced wall is very much alike that of an unreinforced wall. This with the exception that a tension element in vertical direction is available. Therefore some modifications of the previous equations are given.

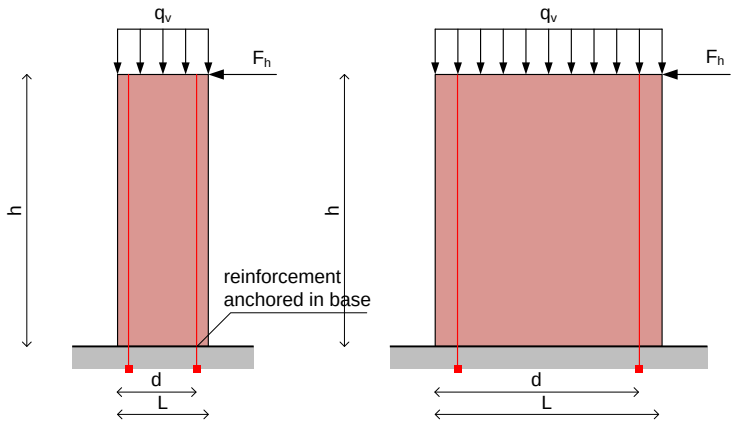

figure 10 Sketch of a slender and a stocky reinforced masonry wall with in plane loading

Hereafter the rules in Eurocode 6 (NEN-EN 1996-1-1) for the moment and shear resistance of reinforced walls are summarized.

2.3.2 Moment failure

The moment resistance M_R is based on equilibrium of wall which is influenced by the ultimate eccentricity of the vertical reaction force and the tension force in the reinforcement and its anchors $F_{v,r}$.

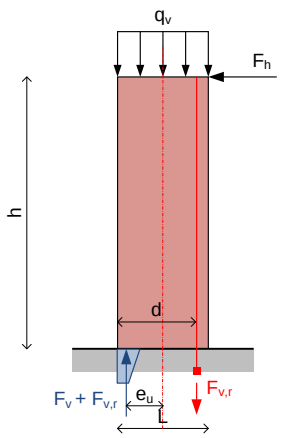

figure 11 Sketch of a reinforced masonry wall with in plane loading

The ultimate eccentricity e_u follows from the ultimate depth of the compression zone and the length of the wall:

$$F_v = q_v L$$

$$x_u = \frac{14(F_v + F_{v,r})}{9 t f_m}$$

$$M_R = (F_v + F_{v,r})\left[0{,}5L - 0{,}551\frac{(F_v + F_{v,r})}{t f_m}\right] + F_{v,r}\left[d - \frac{L}{2}\right]$$

where:

$F_{v,r}$ is the tensile force in the anchor of the reinforcement

d is the effective depth of the reinforcement

2.3.3 Shear failure

With respect to shear failure again two situations have to be considered:

c. shear failure in the masonry wall, where the resistance is based on the initial shear strength, the contribution from the normal stress and the effective depth;
d. sliding of the masonry wall over the base, where the resistance is based on dry friction only.

According to Eurocode 6 the shear resistance of a reinforced masonry wall V_R can be derived with the following equation:

$$V_R = L\,t\,\frac{f_{vo} + 0,4\sigma_v}{\gamma_m} = Lt\,\frac{f_{vo}}{\gamma_m} + \frac{0,4F_v}{\gamma_m}$$

In this report this equation is changed slightly. In the equation the length of the wall L will be replaced by the effective depth of the wall:

$$V_R = d\,t\,\frac{f_{vo} + 0,4\sigma_v}{\gamma_m} = d\,t\,\frac{f_{vo}}{\gamma_m} + \frac{0,4F_v}{\gamma_m}$$

The friction resistance of the wall will be identical as described in 2.2.3, however the normal load is increased by the tension force in the reinforcement or its anchor:

$$V_{R,s} = 0,75\,(F_v + F_{v,r})$$

2.4 Specimens failing due to rocking/crushing

From the test report is shows that it are the specimens S1 till S3 and M1 till M3 which are in a rocking and/or crushing mode. Hereafter first the maximum horizontal load resistance is calculated in case there is no tension strength in the horizontal section at the base of the wall:

$$F_{h,u} = \frac{M_R}{h} = \frac{F_v}{h}\left[0,5L - 0,551\frac{F_v}{t\,f_m}\right]$$

Based on a masonry compression strength f_m of 15 N/mm², a wall thickness t of 100 mm and a wall height of 2450 mm, the horizontal resistance in case of no tension strength is given in table 4. Here the vertical load F_v is the sum of the top load and the own weight of the wall. The calculated resistance F_{Rh} is compared with the maximum horizontal resistance found in the tests.

table 4 Horizontal resistance due to rocking in case of no tension strength at base

specimen	L [mm]	F_v [kN]	F_{Rh} [kN]	$F_{h,test}$ [kN]		ratio $F_{h,test}/F_{R,h}$
S1	1100	26,9	5,9	13,2		2,23
S2	1100	37,9	8,3	22,3		2,69
S3	1100	59,9	12,9	21,6		1,67
M1	2000*	38,8	15,1	31,7		2,09
M2	2000*	68,8	26,5	41,0		1,54
M3	2000*	108,8	41,3	61,4		1,49
L1**	4000	77,6	62,4	94,3		1,51
L2**	4000	137,6	109,5	135,1		1,23
L3**	4000	217,6	170,6	173,0		1,01
*the distance L/2 is reduced with 30 mm due to the limited length of the concrete base beam **these specimens are not realy in a rocking mode						

It can be concluded that due to the application of the anchors the horizontal resistance of the slender walls is increased. The increase is lesser for the stocky specimens L2 - L3, these failed due to sliding.

Based on the following equation:

$$F_{h,test}\, h = (F_v + F_{v,r})\left[0{,}5L - 0{,}551\frac{(F_v + F_{v,r})}{t\, f_m}\right] + F_{v,r}\left[d - \frac{L}{2}\right]$$

The tensile force in the anchors can be determined. In table 5 these forces and the vertical displacement over the base joint are presented.

table 5 Required force in the anchors to achieve moment equilibrium and the maximum vertical uplift of the specimen at the anchor location

specimen	$F_{v,r}$ [kN]	maximum uplift [mm]
S1	20,2	10
S2	40,0	10
S3	27,6	9
M1	23,7	30
M2	22,5	28
M3	34,6	27
L1	22,9	35
L2	21,5	22
L3	11,1	21

It should be concluded that the variation in anchor force is rather great and that there seems to be no relation with the vertical uplift. It should be noted that the recorded vertical uplift is not only the vertical deformation of the base joint but also the uplift of the concrete base beam. Based on a log-normal distribution the mean value of the anchor force of the specimens S and M is 28,1 kN and the variation coefficient is 0,27. The characteristic value of the anchor capacity equals 15,3 kN.

It can be concluded that due to application of the anchors a tension resistance in the base joint of the masonry wall is introduced. For more slender specimens, due to this a significant increase of the horizontal resistance is found.

It can be concluded that for specimens S, M and L1 the maximum displacement found is equal to 40 mm. This is equal to a drift of 40/2450×100% = 1,6%. The maximum displacement of the specimens L2 and L3 is 28,6 mm (1,1 %).

2.5 Analysis of specimens failing due to shear

None of the specimens has failed due to shear. Hereafter the shear resistance is calculated for the section just below the loading beam at the top of the specimen. Based on the shear strength of the masonry without the sleeves, as determined by experiments (see 1.3.2).

$f_{vd} = 0{,}3\ N/mm^2 + 0{,}82\ \sigma_v$
$V_R = 0{,}3 \cdot t \cdot L + 0{,}82\ F_v$

where:
t is the wall thickness [mm]
L is the wall length [mm]
F_v is the normal load [N]

Additional the shear resistance is also calculated based on the friction coefficient as described in Eurocode 6 (EN 1996-1-1):

$V_{R,EN} = 0{,}3\ [N/mm^2] \cdot t \cdot L + 0{,}4\ F_v$

table 6 Horizontal resistance at the top of the specimen

specimen	L [mm]	F_v [kN]	V_R [kN]	$F_{h,test}$ [kN]	ratio $F_{h,test}/F_{R,h}$	$V_{R,EN}$ [kN]
S1	1100	22	51,0	13,2	0,26	41,8
S2	1100	33	60,1	22,3	0,37	46,2
S3	1100	55	78,1	21,6	0,28	55,0
M1	2000	30	84,6	31,7	0,38	72,0
M2	2000	60	109,2	41,0	0,38	84,0
M3	2000	100	142,0	61,4	0,43	100,0
L1	4000	60	169,2	94,3	0,56	144,0
L2	4000	120	218,4	135,1	0,62	168,0
L3	4000	200	284,0	173,0	0,61	200,0

It can be concluded that the shear resistance of a full masonry wall without sleeves and reinforcement based on both the material properties determined and the rules in Eurocode 6 leads to a resistance higher than the maximum horizontal load on the specimens. However in the specimens shear failure is also not occurring.

Due to the fact that the friction coefficient in the masonry as tested is higher than the friction coefficient between the masonry and the concrete base beam the critical section will always be at the

joint between the masonry wall and the concrete base beam. Therefore other sections than the one at the top will not be considered.

2.6 Analysis of specimens failing due to sliding as base joint

From the description of the behaviour of the specimens during the test it can be concluded that the base joint will be cracked at a load level significant smaller than the maximum resistance. Further it is observed that only long specimens L1, L2 and L3 show sliding of the specimen over the base joint.

Hereafter the resistance of the base joint, derived from the equation:

$V_{R,s} = 0,75\ (F_v + F_{v,r})$

is compared with the maximum horizontal resistance of the specimen.

table 7 Shear/sliding resistance base joint compared to maximum horizontal force in test

specimen	L [mm]	F_v [kN]	$F_{v,r}$ [kN]	$V_{R,s}$ [kN]	$F_{h,test}$ [kN]	ratio $F_{h,test}/F_{R,h}$
S1	1100	26,9	20,2	35,3	13,2	0,37
S2	1100	37,9	40,0	58,4	22,3	0,38
S3	1100	59,9	27,6	65,6	21,6	0,33
M1	2000	38,8	23,7	46,9	31,7	0,68
M2	2000	68,8	22,5	68,4	41,0	0,60
M3	2000	108,8	34,6	107,5	61,4	0,57
L1	4000	77,6	22,9	74,4	94,3	1,28
L2	4000	137,6	21,5	119,4	135,1	1,35
L3	4000	217,6	11,1	171,6	173,0	1,01

It is concluded that in the specimens where sliding has occurred, the ratio between the maximum horizontal force on the specimen and the calculated shear/sliding resistance is 1,0 or greater. From this is can be concluded that the equation for the shear/sliding resistance can be used to describe the resistance of a base joint between a masonry wall and a concrete surface.

It should be noted that dowel action of the anchors is not considered. The contribution of the anchors is in creating an additional compression force in the joint which due to the friction will result in an extra resistance against sliding. As shown in the behaviour of L2 and L3 the masonry around the anchors will be damage due to the horizontal stiffness of the anchors, so no local horizontal resistance can be found.

2.7 Conclusions and recommendation

Due to the application of QuakeShield with CEM finishing to a masonry wall in combination with anchors lapped to the CFRP strips on the outer side of the specimens, the resistance to withstand horizontal forces is increased. The horizontal resistance can be derived from the moment equilibrium of the wall. In this the capacity of the anchors can be assumed equal to the characteristic value derived from the performed tests: 15,3 kN.

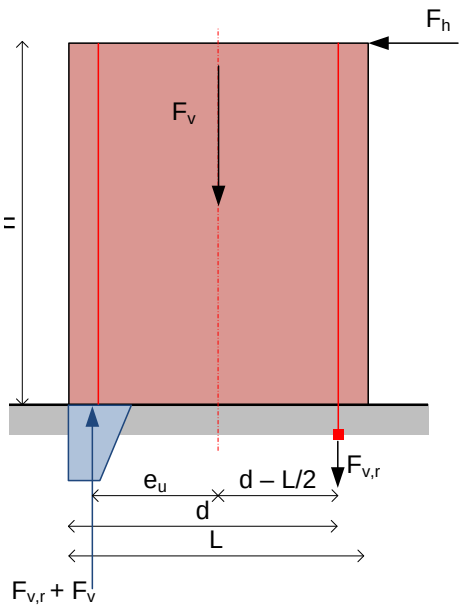

figure 12 Scheme for moment equilibrium

The resistance against a horizontal force can be found from the following equations:

$$x_u = \frac{14(F_v + F_{v,r})}{9\,t\,f_m}$$

$$e_u = \frac{67}{189}x_u = 0{,}551\frac{F_v + F_{v,r})}{t\,f_m}$$

$$M_{in} = (F_{v,r} + F_v)e_u + F_{v,r}\left(d - \frac{L}{2}\right)$$

$$M_{out} = F_{Rh}\,h$$

$$F_{Rh} = \frac{F_v\,e_u + F_{v,r}\left(e_u + d - 0{,}5L\right)}{h}$$

where:

t	is the thickness of the wall;
f_m	is the compression strength of the masonry;
F_v	is the normal force due to the load on top of the wall and its own weight;
$F_{v,r}$	is the tension force in the anchor;
x_u	is the ultimate depth of the compression zone
e_u	is the ultimate eccentricity of the vertical reaction force
h	is the height of the wall

Although shear failure in the masonry walls did not occur, it can be stated that the shear resistance of the masonry wall with QuakeShield can be assumed identical to that of an unreinforced masonry wall as described by Eurocode 6 (NEN-EN 1996-1-1). In general this shear resistance will be greater than the shear/sliding resistance of the base joint. The shear/sliding resistance of the base joint can be expressed with the following equation:

$V_{R,s} = 0,75\ (F_v + F_{v,r})$

where:
$V_{R,s}$ is the shear/sliding resistance;
F_v is the normal force due to the load on top of the wall and its own weight;
$F_{v,r}$ is the tension force in the anchor.

It is recommended to create more background information about the capacity of the anchor and the lap with the CFRP strip. The capacity of the anchor and lap can be improved by decreasing the variation in experimental results.

3 Summary

QuakeShield has performed experimental research into the behaviour of masonry walls with in plane loading of which the properties are enhanced by the application of QuakeShield with a CEM finishing and anchors to the concrete base beam.

From the results of the experiments it can be concluded that due to the application the QuakeShield and the anchor the resistance to withstand a horizontal in plane load can be increased. This increase will be the largest for slender walls and walls with small top loading.

For slender walls a drift limit of 1,6% is found while the ultimate horizontal displacement was not reached in the tests. For the stocky walls which failed due to sliding of the base joint the drift limit is equal to 1,1% or more.

The moment resistance of the base joint will be increased due to the tension capacity of the anchor and its lap with the CFRP strip. In the test no shear failure of the masonry wall was observed. However it can be stated that the shear resistance of the masonry wall with QuakeShield at least equals the shear resistance of an unreinforced masonry wall as described by Eurocode 6. In general the shear/sliding resistance of the base joint at the foot of the masonry wall will be governing. The resistance of this joint is equal to 75% of the compression force in the joint, caused by the top load, its own weight and the tension force in the anchor.

Rijswijk, 21st of November 2017.

Prof.ir. S.N.M. Wijte

ir. B. van den Broek